Final PHASE

Teleflex Medical Private Limited, Puducherry
Water Balance Sheet

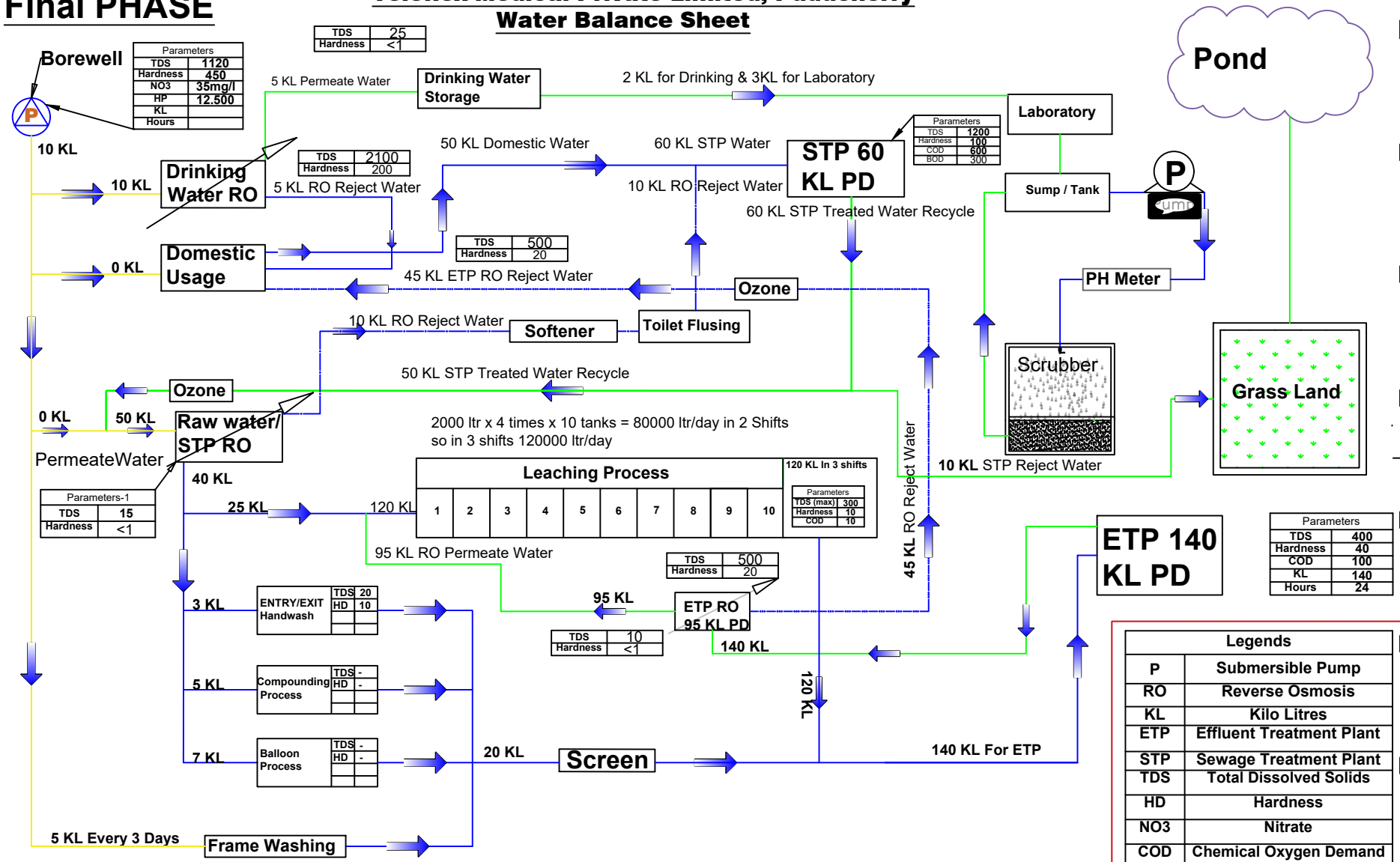

Legends	
P	Submersible Pump
RO	Reverse Osmosis
KL	Kilo Litres
ETP	Effluent Treatment Plant
STP	Sewage Treatment Plant
TDS	Total Dissolved Solids
HD	Hardness
NO3	Nitrate
COD	Chemical Oxygen Demand